Oxford Cambridge and RSA

Thursday 22 May 2025 – Morning

GCSE (9–1) in Combined Science B (Twenty First Century Science)

J260/07 Physics (Higher Tier)

Time allowed: 1 hour 45 minutes

H

You must have:
- a ruler (cm/mm)
- the Equation Sheet for GCSE (9–1) Combined Science Physics B (inside this document)

You can use:
- an HB pencil
- a scientific or graphical calculator

Please write clearly in black ink. **Do not write in the barcodes.**

Centre number | | | | | | Candidate number | | | | |

First name(s) _____

Last name _____

INSTRUCTIONS
- Use black ink. You can use an HB pencil, but only for graphs and diagrams.
- Write your answer to each question in the space provided. If you need extra space use the lined page at the end of this booklet. The question numbers must be clearly shown.
- Answer **all** the questions.
- Where appropriate, your answer should be supported with working. Marks might be given for using a correct method, even if your answer is wrong.

INFORMATION
- The total mark for this paper is **95**.
- The marks for each question are shown in brackets **[ ]**.
- Quality of extended response will be assessed in questions marked with an asterisk (*).
- This document has **24** pages.

ADVICE
- Read each question carefully before you start your answer.

© OCR 2025 [601/8690/2]
DC (DE/JG) 354047/4
OCR is an exempt Charity

1 Casey is driving a car along a straight, level road when they see a road block ahead.

The graph shows how the speed of the car changes with time immediately after Casey sees the road block.

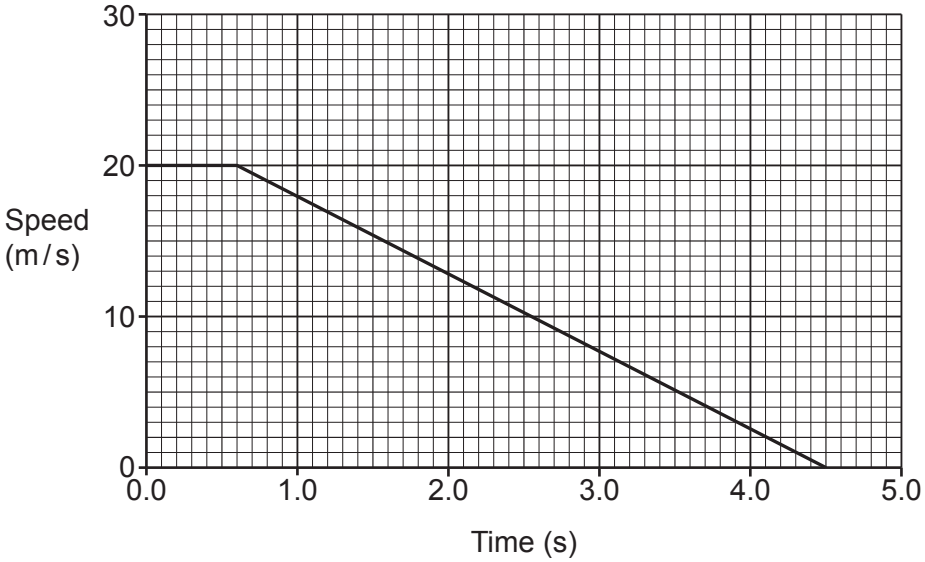

(a) While Casey is reacting to the obstruction the car continues to travel at constant speed.

Calculate the distance travelled by the car while Casey is **reacting**.

Use the Equation Sheet.

Distance = ... m **[4]**

© OCR 2025

(b) The initial kinetic energy of the car is 174 kJ.

When Casey presses the brakes, the braking force acting on the car is 4350 N.

The work done by the brakes to stop the car = the kinetic energy lost by the car.

Calculate the distance travelled while the car is braking.

Use the equation: work done = force × distance

Distance = ... m **[4]**

(c) In the village where Casey lives the speed limit has been reduced from 30 mph to 20 mph.

Explain how reducing the speed limit can improve road safety in the village.

.....

.....

.....

..... **[2]**

© OCR 2025

2 Amit does an experiment at room temperature to compare the thermal conductivity of different insulating materials.

(a) This is Amit's method:

- Place a small metal container inside a large metal container.
- Place some insulating material between them.
- Pour water at a temperature of 80 °C into the small container and place a lid on it.
- Measure the temperature of the water every minute for 30 minutes using a thermometer.
- Repeat the experiment using different insulating materials.

This is the apparatus used:

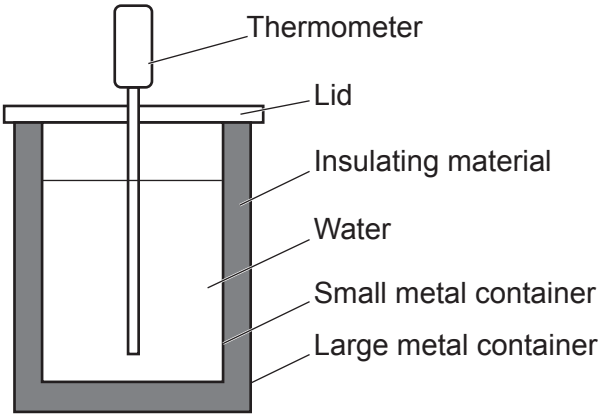

(i) State **two** variables that Amit should control in this experiment.

1 .....

2 .....
[2]

(ii) Explain why Amit uses metal containers rather than plastic containers.

.....

.....

.....

..... **[2]**

© OCR 2025

(b) The graph shows Amit's results for one insulating material.

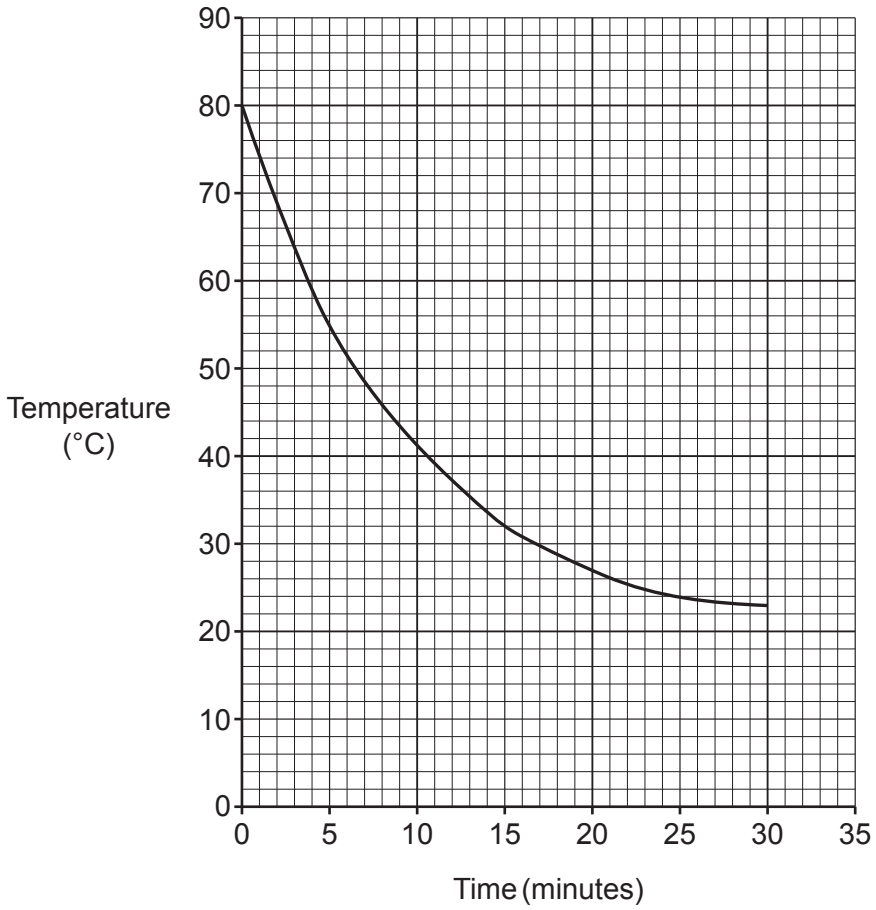

(i) Draw a tangent to the curve at time of 15 minutes. **[1]**

(ii) Calculate the gradient of the tangent drawn in **(b)(i)**.

Gradient = ... °C / minute **[2]**

(iii) Sketch a curve on **the graph** to show the results of the experiment when a material of **higher** thermal conductivity is used. **[2]**

© OCR 2025

3 Li is visiting the United States (US).

(a) The domestic supply in the US is a.c. with a frequency of 60 Hz and a voltage of 120 V.

Describe the differences between the domestic supply in the United Kingdom (UK) and in the United States.

.....

.....

.....

..... **[2]**

(b) Li buys an electric kettle with a power rating of 1.2 kW.

Li uses the kettle for a total of 8 hours.

Calculate the cost of using the kettle for 8 hours.

Use the Equation Sheet.

Give your answer in US dollars.

1 kWh = 16 US cents
100 US cents = 1 US dollar

Cost = ... US dollars **[4]**

© OCR 2025

(c) Electrical appliances in the UK usually contain a fuse but Li finds that the kettle they have bought does **not** contain one.

If the current passing through a fuse is too large, the fuse wire inside the fuse melts and the circuit is broken.

Li uses this circuit to investigate a 5A fuse:

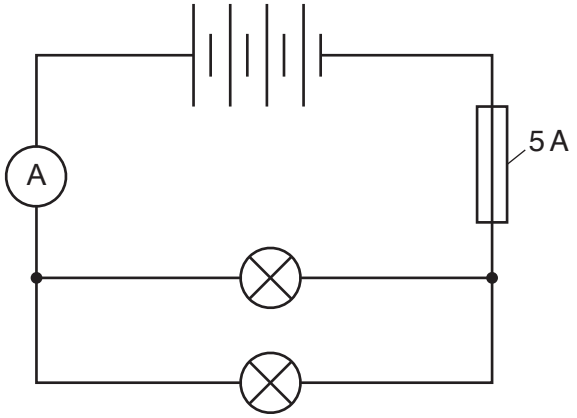

The wire in the 5A fuse melts when the current through it exceeds 5A.

Li adds more identical filament lamps in parallel to the circuit and measures the current in the battery after each lamp is added.

Complete the table by predicting the current in the battery as more lamps are added in parallel.

Number of lamps	Current in battery (A)
1	1.6
2	3.2
3	.....
4	.....

[2]

© OCR 2025

(d)* Li makes Circuits **A** and **B** to help work out what kind of circuit is used to connect the lights in a house they are staying in.

Circuit A

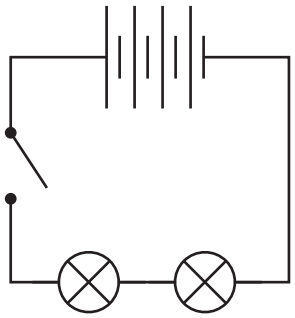

Circuit B

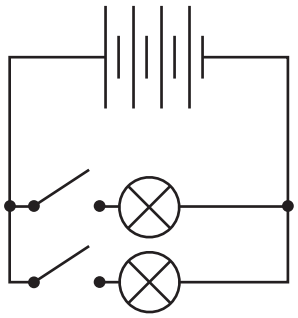

Explain why Circuit **B** is used in the house rather than Circuit **A and** why the lamps in Circuit **B** are brighter than the lamps in Circuit **A**.

Use ideas about current, potential difference and resistance in your answer.

.....

.....

.....

.....

.....

.....

.....

.....

.....

.....

.....

..... **[6]**

© OCR 2025

BLANK PAGE

DO NOT WRITE ON THIS PAGE
Turn over for the next question

© OCR 2025

4 Leo is watching an ant crawling on a wall.

(a) The ant:

- crawls 4.0 cm horizontally to the right at a constant speed
- turns left through 90°
- and then crawls 6.0 cm vertically upwards at the same speed.

(i) Calculate the distance the ant travels in this short journey.

You can include a diagram to support your answer.

Distance = ... cm **[1]**

(ii) Calculate the displacement of the ant from its starting point to its end point.

Use the equation:

displacement = $\sqrt{\text{distance moved right}^2 + \text{distance moved upwards}^2}$

Give your answer to **2** significant figures.

Displacement = ... cm **[3]**

(iii) Explain why the answers to **(a)(i)** and **(ii)** are different.

.....

.....

.....

..... **[2]**

© OCR 2025

(b) Which **two** quantities change after the ant turns left through 90°?

Tick (✓) **two** boxes.

The kinetic energy of the ant ☐

The momentum of the ant ☐

The mass of the ant ☐

The velocity of the ant ☐

The weight of the ant ☐

[2]

© OCR 2025

5 The symbol $^{241}_{95}Am$ represents the nucleus of americium-241.

(a)
(i) Complete the table to describe the nucleus of americium-241.

Number of neutrons	
Number of protons	

[2]

(ii) There are many different isotopes of americium.

Describe what is meant by the term isotope.

.....

.....

.....

..... **[2]**

(iii) Americium-241 is radioactive and decays into an isotope of neptunium by emitting radiation X. This is represented by the equation:

$$^{241}_{95}Am \longrightarrow ^{237}_{93}Np + X$$

Identify X.

Explain your answer.

X = ...

Explanation: .....

.....

.....

[2]

(b) Americium-241 is used in household smoke detectors. It has a half-life of 430 years.

Explain why this half-life makes americium-241 suitable for use in smoke detectors.

.....

.....

.....

..... **[2]**

© OCR 2025

BLANK PAGE

DO NOT WRITE ON THIS PAGE
Turn over for the next question

© OCR 2025

6 The graph shows how the velocity of a ball varies with time after it is dropped from the roof of a building.

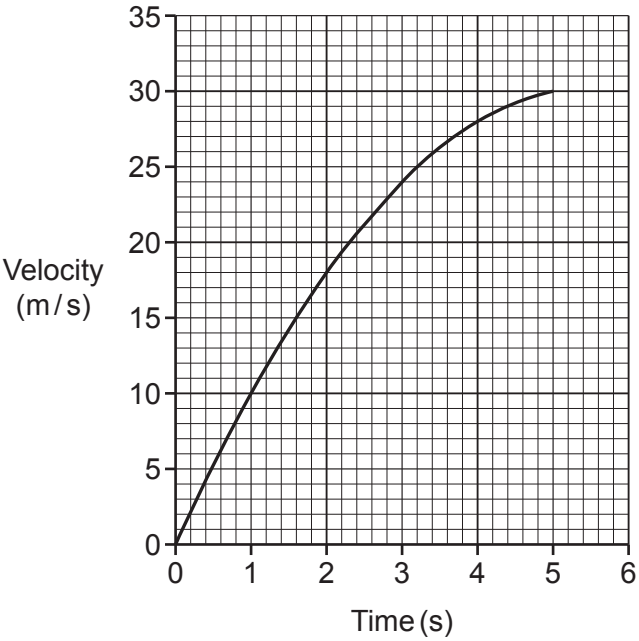

(a) Explain the differences in the motion of the ball at 2 and 4 seconds.

.....

.....

.....

.....

.....

.....

.....

..... **[4]**

© OCR 2025

(b) The ball has a mass of 0.60 kg and it hits the ground with a speed of 31 m/s.
The ball then bounces vertically upwards.

The change in **momentum** of the ball due to hitting the ground is 25.8 kg m/s.

(i) Calculate the upward velocity of the ball immediately after it leaves the ground.

Use the equation: change in momentum = mv – mu

m = mass
u = initial velocity
v = final velocity

Velocity = ... m/s **[3]**

(ii) The ball is in contact with the ground for 0.5 s.

Calculate the resultant force acting on the ball while it is in contact with the ground.

Use the equation: change in momentum = resultant force × time for which it acts

Resultant force = ... N **[3]**

(iii) Calculate the kinetic energy of the ball as it hits the ground.

Use the Equation Sheet.

Kinetic energy = ... J **[3]**

(iv) Explain why the maximum height of the ball after bouncing is lower than the roof of the building.

.....

.....

.....

..... **[2]**

© OCR 2025

7 Sara investigates the resistance of a metal wire.

(a) Draw a circuit that Sara can use to measure the resistance of **different lengths** of wire.

Include a voltmeter and an ammeter in the circuit.

[3]

(b) The graph shows Sara's results.

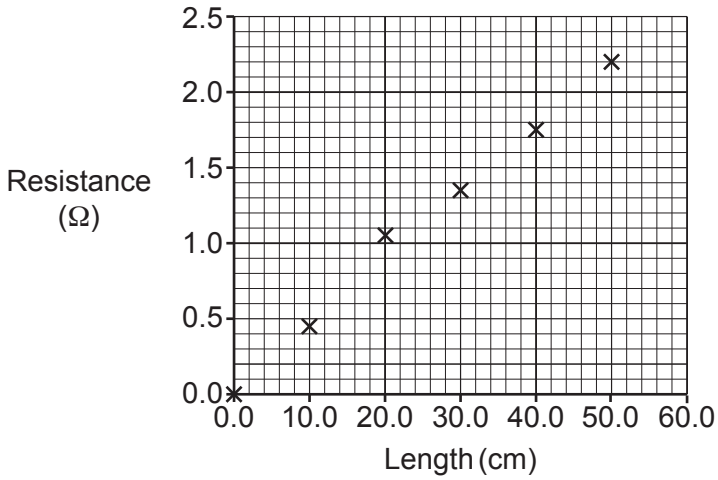

(i) Draw a line of best fit on the graph. **[1]**

(ii) For a length of wire of 50 cm, the resistance is 2.2 Ohms.

Calculate the length of wire that would have a resistance of 20 Ohms.

Length = ... cm **[3]**

© OCR 2025

8

(a) Describe the similarities and differences between radio waves and ultraviolet waves.

.....

.....

.....

.....

.....

.....

.....

..... **[4]**

(b) Atoms can absorb ultraviolet radiation.

Suggest **one** way in which the arrangement of electrons in an atom may change when the atom absorbs ultraviolet radiation.

.....

..... **[1]**

© OCR 2025

9 Zayn moves a helium filled balloon into their house from outside.
The inside of the house is much **warmer** than the outside.

Zayn notices that the **balloon expands** and becomes **more rigid** when the balloon is inside.

Explain Zayn's observation.

Use ideas about the relationship between the temperature of a gas and its pressure at constant volume.

.....

.....

.....

.....

.....

.....

.....

..... **[4]**

© OCR 2025

BLANK PAGE

DO NOT WRITE ON THIS PAGE
Turn over for the next question

© OCR 2025

10 Hiro has been given a rock sample to identify.

(a) Hiro uses a 100 cm^3 measuring cylinder and a balance that can measure up to 100.00 g to find the density of the rock.

The diagram shows the steps followed by Hiro.

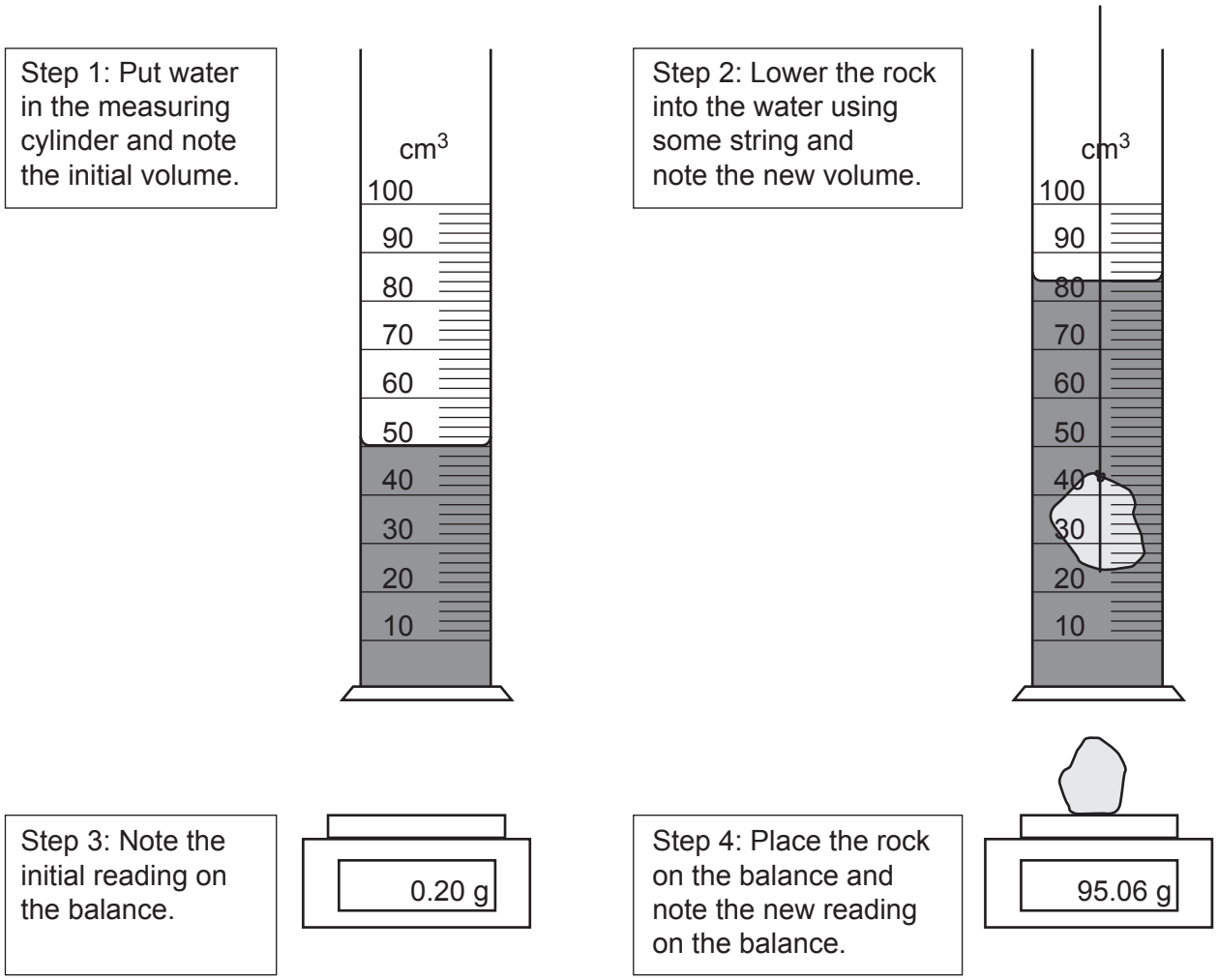

© OCR 2025

Calculate the density of the rock.

Use the diagram.

Use the equation: density = $\frac{\text{mass}}{\text{volume}}$

Density = ... g/cm^3 **[4]**

© OCR 2025

(b) Hiro does another experiment to find the specific heat capacity of a different sample of the same rock. This is the method:

1. Measure the mass of the rock

2. Heat the rock in boiling water for 10 minutes to ensure that it reaches a temperature of 100 °C.

3. Move the rock from the boiling water to water with a mass of 200 g and an initial temperature of 20 °C, using tongs.

4. Measure the temperature of the 200 g of water once it has stopped increasing.

5. Calculate the energy transferred to the water.

These are Hiro's results:

Mass of the rock (kg)	0.078
Energy transferred to the water (J)	4310
Initial temperature of rock (°C)	100
Final temperature of rock (°C)	26

Calculate the specific heat capacity of the **rock**.

Assume that all the energy transferred by the rock when it is put in the 200 g of water is transferred to the water.

Use the equation: change in internal energy = mass × specific heat capacity × change in temperature

Give your answer to an appropriate number of significant figures.

Specific heat capacity = ... J / kg °C **[4]**

© OCR 2025

(c) Hiro thinks that the rock could be granite.

Hiro repeats both experiments multiple times and calculates a mean density and specific heat capacity for the rock.

The table shows Hiro's mean values from the experiments and data collected from the internet:

Mean values from experimental data	Data collected from the internet
Density = 2.83 g / cm^3	Density of granite is between 2.50–2.81 g / cm^3
Specific heat capacity = 768 J / kg °C	Specific heat capacity of granite = 774 J / kg °C

(i) Suggest why Hiro cannot be certain that the rock is granite.

Use information from the table.

.....

..... **[1]**

(ii) Describe how Hiro can change each of the experimental methods in **(a)** and **(b)** to be more certain that the rock is granite.

.....

.....

.....

..... **[2]**

(d) Pumice is another type of rock which contains microscopic bubbles of gas.

Suggest how the density of pumice compares to most other rocks.

Use the particle model of matter to **explain** your answer.

.....

.....

.....

.....

.....

.....

.....

..... **[4]**

END OF QUESTION PAPER

© OCR 2025

EXTRA ANSWER SPACE

If you need extra space use this lined page. You must write the question numbers clearly in the margin.

OCR
Oxford Cambridge and RSA

Copyright Information

OCR is committed to seeking permission to reproduce all third-party content that it uses in its assessment materials. OCR has attempted to identify and contact all copyright holders whose work is used in this paper. To avoid the issue of disclosure of answer-related information to candidates, all copyright acknowledgements are reproduced in the OCR Copyright Acknowledgements Booklet. This is produced for each series of examinations and is freely available to download from our public website (www.ocr.org.uk) after the live examination series.

If OCR has unwittingly failed to correctly acknowledge or clear any third-party content in this assessment material, OCR will be happy to correct its mistake at the earliest possible opportunity.

For queries or further information please contact The OCR Copyright Team, The Triangle Building, Shaftesbury Road, Cambridge CB2 8EA.

OCR is part of Cambridge University Press & Assessment, which is itself a department of the University of Cambridge.

© OCR 2025